Tolerance			
Length	Super	High	Comm
<3	0.05	0.1	--
3TO<6	0.05	0.1	0.2
6TO<30	0.1	0.2	0.5
30TO<120	0.15	0.3	0.8
120TO<315	0.2	0.5	1.2

PART	PAPT NAME	MAT.
1	DUST CAP	PE
2	OUTER HOUSER	PEI
3	LC-FERRULE	ZrO2/CU
4	TUBE	PTFE
5	SPRING	SUS304
6	INNER HOUSER 0.9-new	PEI
7	BOOT 0.9-new	TPE

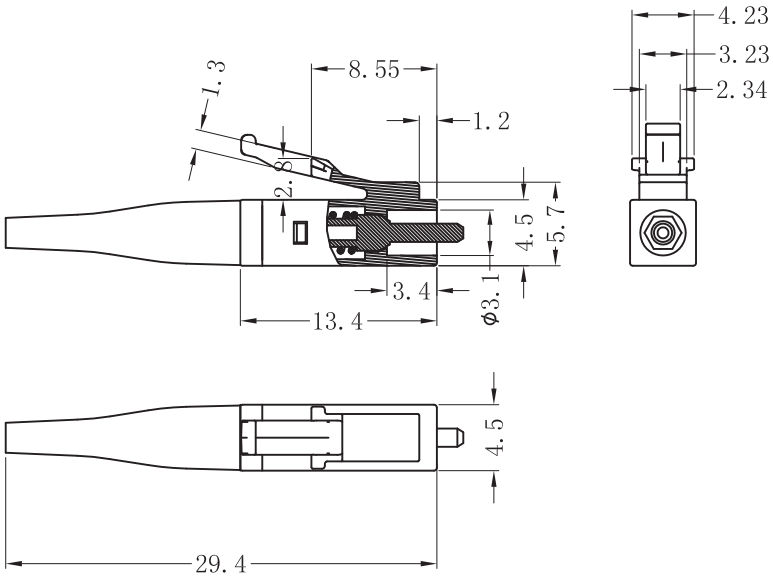

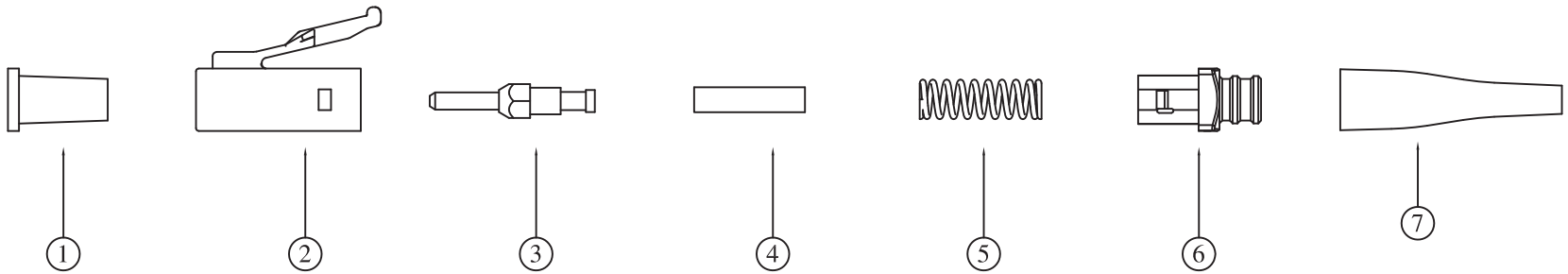

UNIT	mm	PAGE	1 / 1	MODEL	LC Connector
SCALE	2.000	DRAW		MODEL NO.	156021
MAT.		CHECK		PRODUCT NAME	LC-connector 0.9
DATE		APPR.			

VIEW

equip